REVISIONS			
REV	DESCRIPTION	DATE	APPROVED
A	INITIAL DRAWING	06/11/20	J. JANOWITZ

STANDARD IB18 (AU - HT)

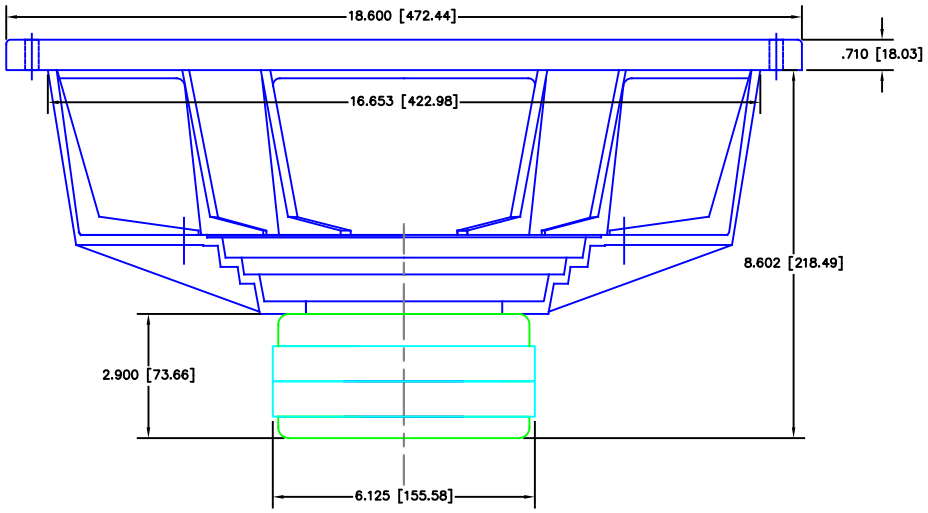

APOLLO OPTION IB18 (AU - HT)

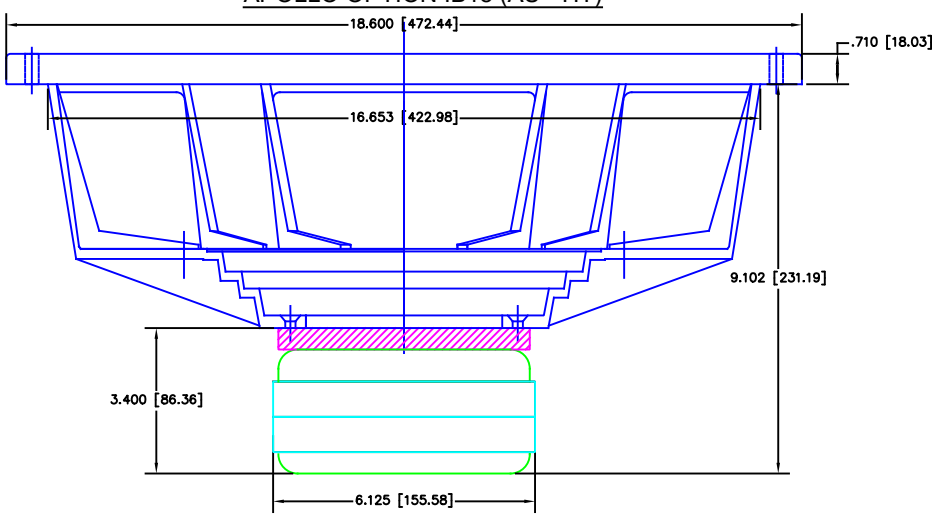

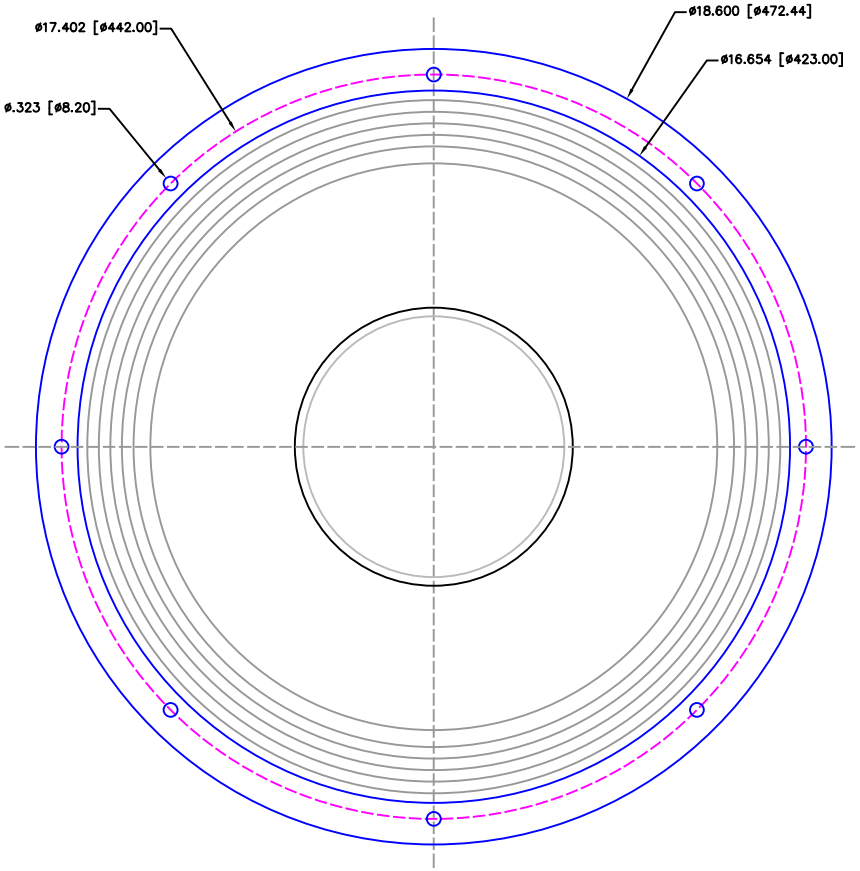

CONTRACT NO.			
APPROVALS		DATE	
DRAWN	J Janowitz	06/11/20	
CHECKED	J Janowitz	06/11/20	
ENGR	J Janowitz	06/11/20	
DESIGN ACTIVITY	J Janowitz	06/11/20	

1825 MILLS ST GREEN BAY, WI 54302
920-469-9198 ACOUSTIC ELEGANCE, L.L.C. 775-258-1406 FAX

TITLE

IB18-dimensional (IB18AU - IB18HT)

SIZE	CAGE CODE	DWG NO.	REV.
A			A

SCALE		CALC. WT	ACT. WT	SHEET
1:1	06/11/20			1 OF 1